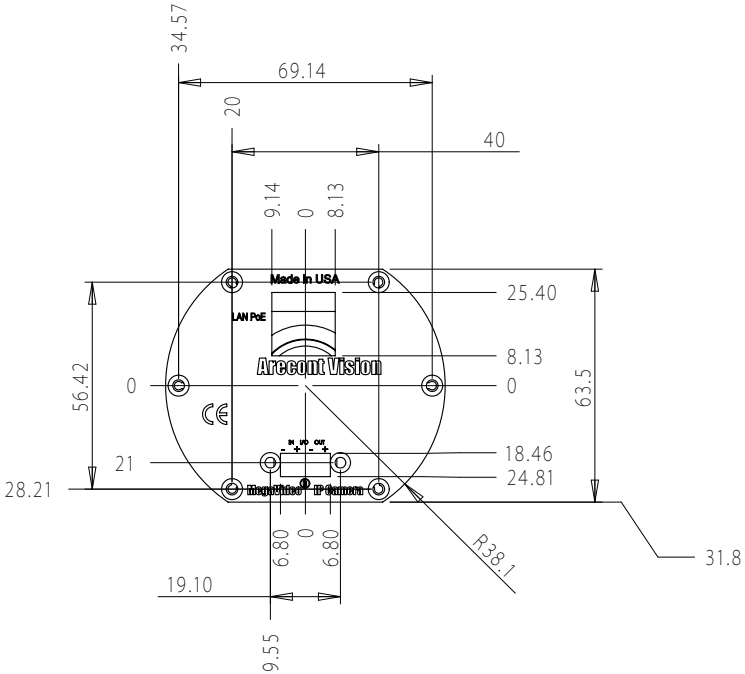
34.57
69.14
20
40
9.14
0
8.13
Made in USA
LAN PoE
Arecont Vision
25.40
8.13
0
0
56.42
63.5
21
28.21
18.46
24.81
R38.1
31.8
6.80
0
6.80
19.10
9.55

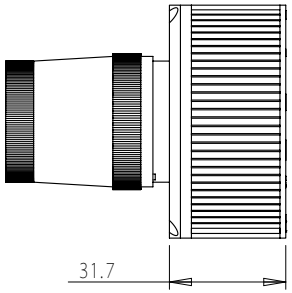
31.7

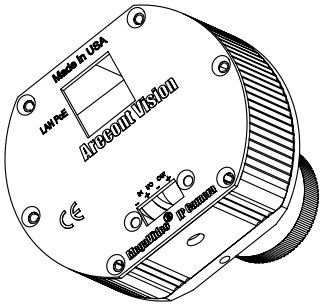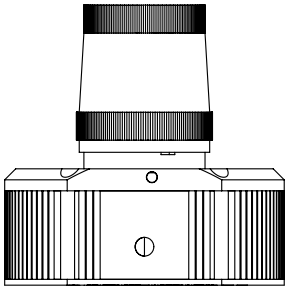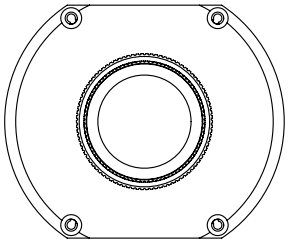
Made in USA
LAN PoE
Arecont Vision